Cambridge Assessment International Education

Cambridge International AS & A Level

CANDIDATE NAME

CENTRE NUMBER

CANDIDATE NUMBER

6306276255

PHYSICS **9702/41**

Paper 4 A Level Structured Questions **October/November 2022**

2 hours

You must answer on the question paper.

No additional materials are needed.

INSTRUCTIONS

- Answer **all** questions.
- Use a black or dark blue pen. You may use an HB pencil for any diagrams or graphs.
- Write your name, centre number and candidate number in the boxes at the top of the page.
- Write your answer to each question in the space provided.
- Do **not** use an erasable pen or correction fluid.
- Do **not** write on any bar codes.
- You may use a calculator.
- You should show all your working and use appropriate units.

INFORMATION

- The total mark for this paper is 100.
- The number of marks for each question or part question is shown in brackets [ ].

This document has **24** pages. Any blank pages are indicated.

© UCLES 2022

Data

acceleration of free fall	$g = 9.81\ \text{m s}^{-2}$
speed of light in free space	$c = 3.00 \times 10^{8}\ \text{m s}^{-1}$
elementary charge	$e = 1.60 \times 10^{-19}\ \text{C}$
unified atomic mass unit	$1\ \text{u} = 1.66 \times 10^{-27}\ \text{kg}$
rest mass of proton	$m_\text{p} = 1.67 \times 10^{-27}\ \text{kg}$
rest mass of electron	$m_\text{e} = 9.11 \times 10^{-31}\ \text{kg}$
Avogadro constant	$N_\text{A} = 6.02 \times 10^{23}\ \text{mol}^{-1}$
molar gas constant	$R = 8.31\ \text{J K}^{-1}\ \text{mol}^{-1}$
Boltzmann constant	$k = 1.38 \times 10^{-23}\ \text{J K}^{-1}$
gravitational constant	$G = 6.67 \times 10^{-11}\ \text{N m}^2\ \text{kg}^{-2}$
permittivity of free space	$\varepsilon_0 = 8.85 \times 10^{-12}\ \text{F m}^{-1}$ $\left(\frac{1}{4\pi\varepsilon_0} = 8.99 \times 10^{9}\ \text{m F}^{-1}\right)$
Planck constant	$h = 6.63 \times 10^{-34}\ \text{J s}$
Stefan–Boltzmann constant	$\sigma = 5.67 \times 10^{-8}\ \text{W m}^{-2}\ \text{K}^{-4}$

Formulae

uniformly accelerated motion	$s = ut + \frac{1}{2}at^2$ $v^2 = u^2 + 2as$
hydrostatic pressure	$\Delta p = \rho g \Delta h$
upthrust	$F = \rho g V$
Doppler effect for sound waves	$f_\text{o} = \frac{f_\text{s} v}{v \pm v_\text{s}}$
electric current	$I = Anvq$
resistors in series	$R = R_1 + R_2 + \ldots$
resistors in parallel	$\frac{1}{R} = \frac{1}{R_1} + \frac{1}{R_2} + \ldots$

© UCLES 2022

gravitational potential	$\phi = -\frac{GM}{r}$
gravitational potential energy	$E_P = -\frac{GMm}{r}$
pressure of an ideal gas	$p = \frac{1}{3}\frac{Nm}{V}\langle c^2 \rangle$
simple harmonic motion	$a = -\omega^2 x$
velocity of particle in s.h.m.	$v = v_0 \cos \omega t$ $v = \pm \omega \sqrt{(x_0^2 - x^2)}$
electric potential	$V = \frac{Q}{4\pi\varepsilon_0 r}$
electrical potential energy	$E_P = \frac{Qq}{4\pi\varepsilon_0 r}$
capacitors in series	$\frac{1}{C} = \frac{1}{C_1} + \frac{1}{C_2} + ...$
capacitors in parallel	$C = C_1 + C_2 + ...$
discharge of a capacitor	$x = x_0 e^{-\frac{t}{RC}}$
Hall voltage	$V_H = \frac{BI}{ntq}$
alternating current/voltage	$x = x_0 \sin \omega t$
radioactive decay	$x = x_0 e^{-\lambda t}$
decay constant	$\lambda = \frac{0.693}{t_{\frac{1}{2}}}$
intensity reflection coefficient	$\frac{I_R}{I_0} = \frac{(Z_1 - Z_2)^2}{(Z_1 + Z_2)^2}$
Stefan–Boltzmann law	$L = 4\pi\sigma r^2 T^4$
Doppler redshift	$\frac{\Delta\lambda}{\lambda} \approx \frac{\Delta f}{f} \approx \frac{v}{c}$

© UCLES 2022

[Turn over

1 **(a)** State the equation for the gravitational force F between two point masses m_1 and m_2 that are separated by a distance r. State the meaning of any other symbols you use.

[2]

(b) A satellite is in a circular orbit of radius R around a planet of mass M.

Show that the period T of the orbit is given by

$$T^2 = kR^3$$

where k is a constant that depends on the value of M. Explain your reasoning.

[3]

(c) A satellite is in a circular orbit around the Earth with a period of 24 hours.
The mass of the Earth is 6.0×10^{24} kg.

(i) Calculate the radius of the orbit.

radius = ... m [2]

© UCLES 2022

(ii) State the **two** other conditions that must be met for the orbit to be geostationary.

1 .....

.....

2 .....

.....

[2]

[Total: 9]

2 Fig. 2.1 shows a laboratory thermometer that is calibrated to measure temperature in degrees Celsius.

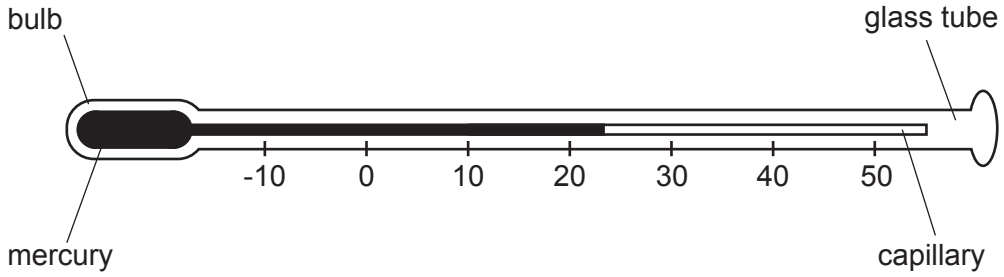

Fig. 2.1

The thermometer makes use of the fact that the density of mercury varies with temperature.

(a) State **two** other physical properties of materials, apart from the density of a liquid, that can be used for measuring temperature.

1 .....

2 .....
[2]

(b) The thermometer is initially at 23.0 °C, as shown in Fig. 2.1. It is used to measure the temperature of an insulated beaker of water that is at 37.4 °C. The bulb of the thermometer is inserted into the water, and the water is stirred until the reading on the thermometer becomes steady.

The mass of water in the beaker is 18.7 g.
The mass of mercury in the thermometer is 6.94 g.
The specific heat capacity of water is 4.18 J g^{-1} K^{-1}.
The specific heat capacity of mercury is 0.140 J g^{-1} K^{-1}.
The glass of the thermometer and the beaker containing the water can be considered to have negligible heat capacity.

(i) Calculate, to three significant figures, the final steady temperature indicated by the thermometer in the water.

temperature = ... °C [4]

(ii) Suggest **one** change that could be made to the design of the thermometer that would enable it to give a more accurate measurement of temperature.

.....

..... [1]

(c) (i) Explain why the thermometer in Fig. 2.1 does **not** provide a direct measurement of thermodynamic temperature.

.....

.....

..... [2]

(ii) Thermodynamic temperature T may be determined by the behaviour of a type of substance for which T is proportional to the product of pressure and volume.

State the name of this type of substance.

..... [1]

[Total: 10]

3 An object is suspended from a spring that is attached to a fixed point as shown in Fig. 3.1.

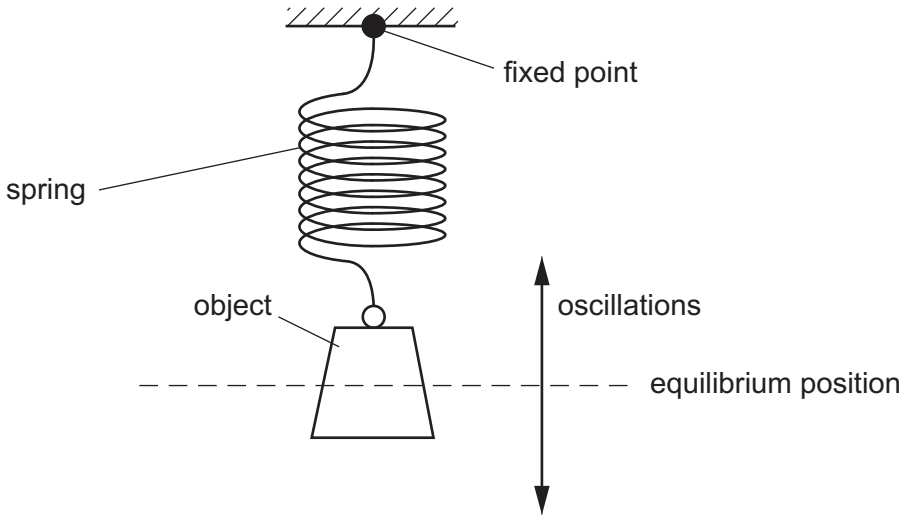

Fig. 3.1

The object oscillates vertically with simple harmonic motion about its equilibrium position.

(a) State the defining equation for simple harmonic motion. Identify the meaning of each of the symbols used to represent physical quantities.

.....

.....

..... [2]

(b) The variation with displacement x from the equilibrium position of the velocity v of the object is shown in Fig. 3.2.

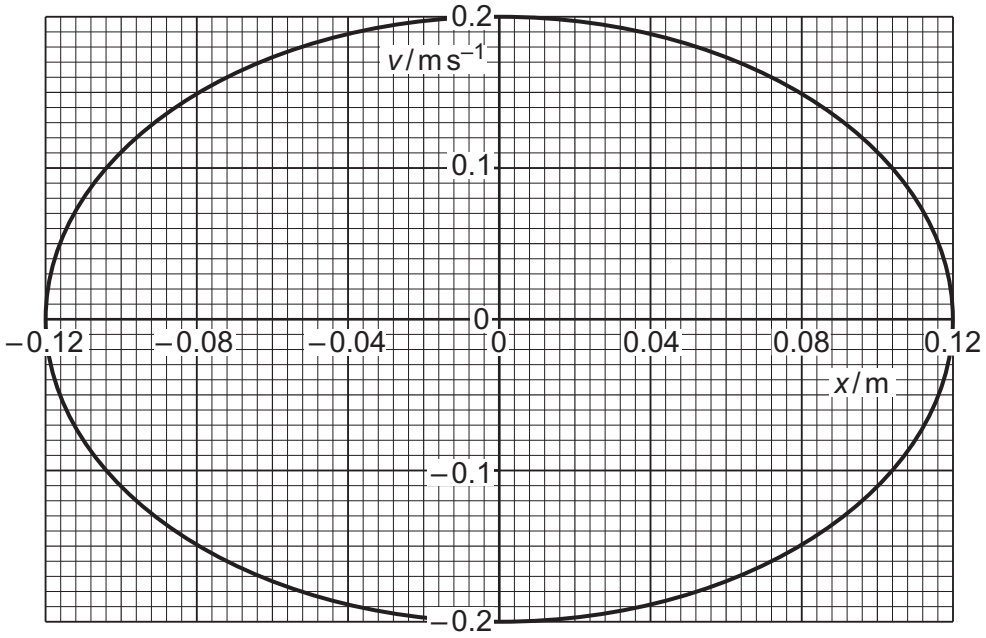

Fig. 3.2

The variation with x of the potential energy E_P of the oscillations of the object is shown in Fig. 3.3.

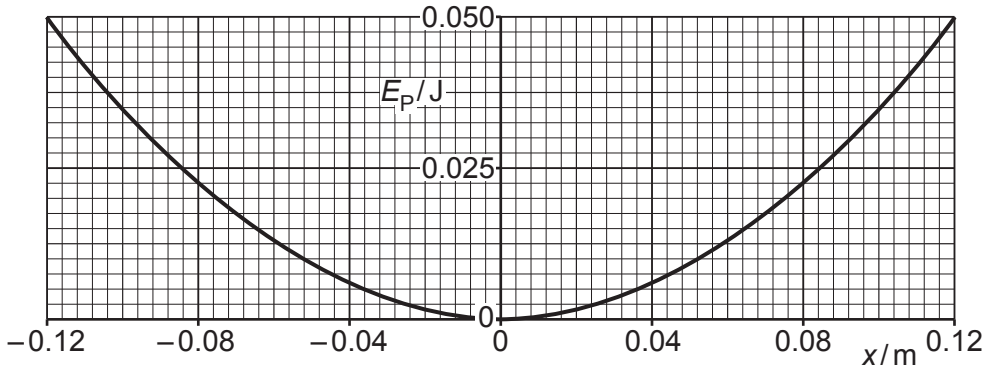

Fig. 3.3

Use Fig. 3.2 and Fig. 3.3 to:

(i) determine the amplitude x_0 of the oscillations

x_0 = ... m [1]

(ii) show that the angular frequency of the oscillations is 1.7 rad s^{-1}

[2]

(iii) determine the mass M of the object.

M = ... kg [2]

(c) The oscillations of the object are now lightly damped.

(i) State what is meant by damping.

.....

.....

..... [2]

(ii) Assume that the damping does not change the angular frequency of the oscillations.

On Fig. 3.2, sketch the variation with x of v when the amplitude of the oscillations is 0.060 m. [2]

[Total: 11]

© UCLES 2022

BLANK PAGE

4 **(a)** State what is indicated by the direction of an electric field line.

.....

..... [2]

(b) Fig. 4.1 shows a pair of parallel metal plates with a potential difference (p.d.) of 2400 V between them.

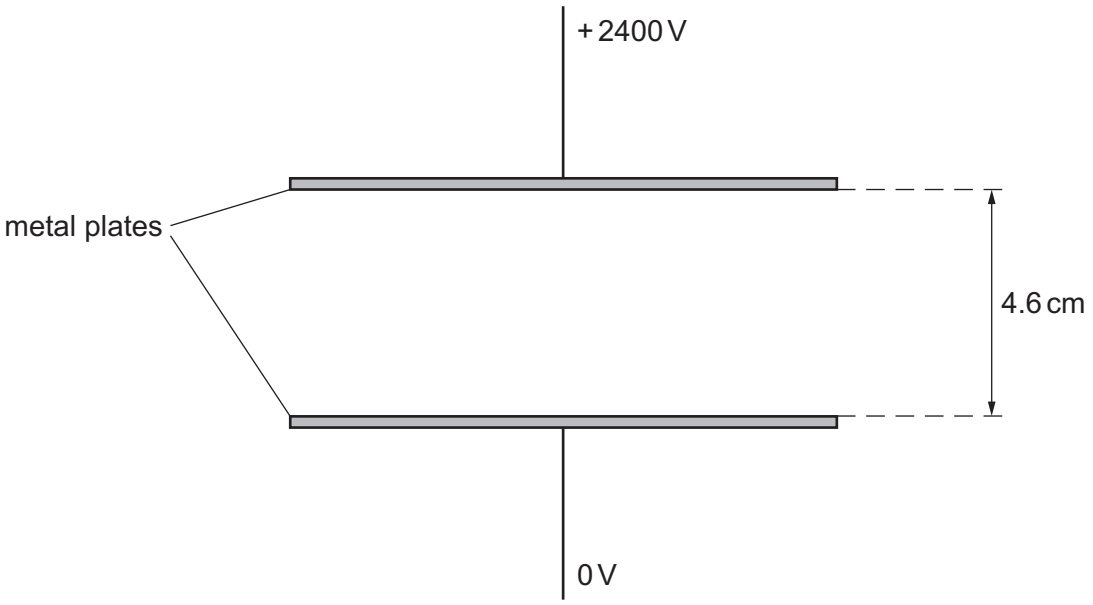

Fig. 4.1

The plates are separated by a distance of 4.6 cm. The plates are in a vacuum.

(i) On Fig. 4.1, draw five lines to represent the electric field in the region between the plates. [3]

(ii) Calculate the strength of the electric field between the plates.

electric field strength = ... $N C^{-1}$ [2]

(c) A moving proton enters the region between the plates from the left, as shown in Fig. 4.2.

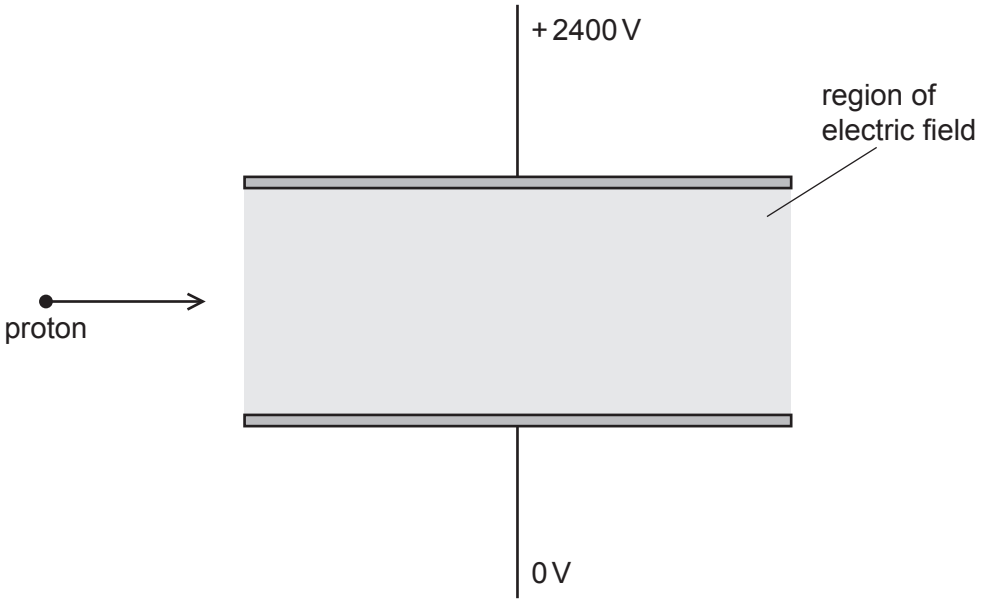

Fig. 4.2

(i) The proton is deflected by the electric field.

On Fig. 4.2, draw a line to show the path of the proton as it moves through and out of the region of the electric field. [2]

(ii) A helium nucleus ($^4_2$He) now enters the region of the electric field along the same initial path as the proton and travelling at the same initial speed.

State and explain how the final speed of the helium nucleus compares with the final speed of the proton after leaving the region of the electric field.

.....

.....

.....

.....

..... [3]

[Total: 12]

5 A capacitor of capacitance 470 μF is connected to a battery of electromotive force (e.m.f.) 24 V in the circuit of Fig. 5.1.

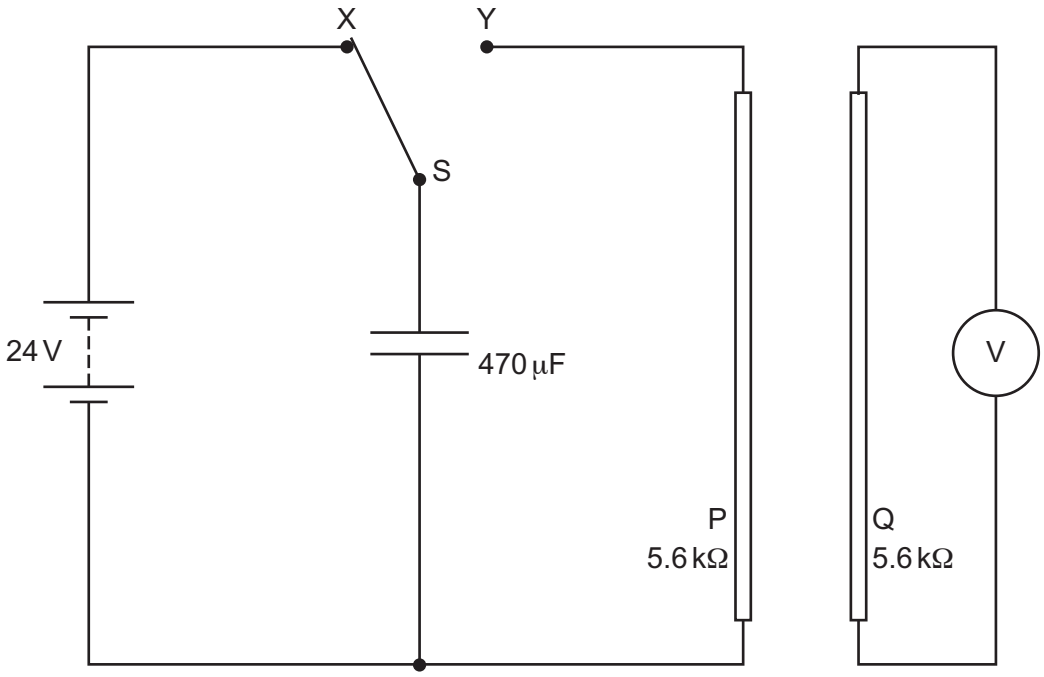

Fig. 5.1

The two-way switch S is initially at position X.

P and Q are identical long straight wires, each with a resistance of 5.6 kΩ. These wires are placed near to, and parallel to, each other. Wire Q is connected to a voltmeter.

At time t = 0, switch S is moved to position Y so that the capacitor discharges through wire P.

(a) (i) Calculate the charge Q_0 on the capacitor at time t = 0.

Q_0 = ... C [2]

(ii) Calculate the current I_0 in wire P at time t = 0.

I_0 = ... A [1]

© UCLES 2022

(iii) Calculate the time constant τ of the discharge circuit.

τ = ... s [2]

(iv) On Fig. 5.2, sketch a line to show the variation with t of the current I in wire P as the capacitor discharges.



Fig. 5.2

[2]

(b) (i) Explain why there is an induced e.m.f. across wire Q during the discharge of the capacitor.

.....

.....

.....

..... [3]

(ii) On Fig. 5.3, sketch a line to suggest the variation with t of the voltmeter reading V.



Fig. 5.3

[1]

[Total: 11]

6 Fig. 6.1 shows a thin slice of semiconducting material used in a Hall probe.

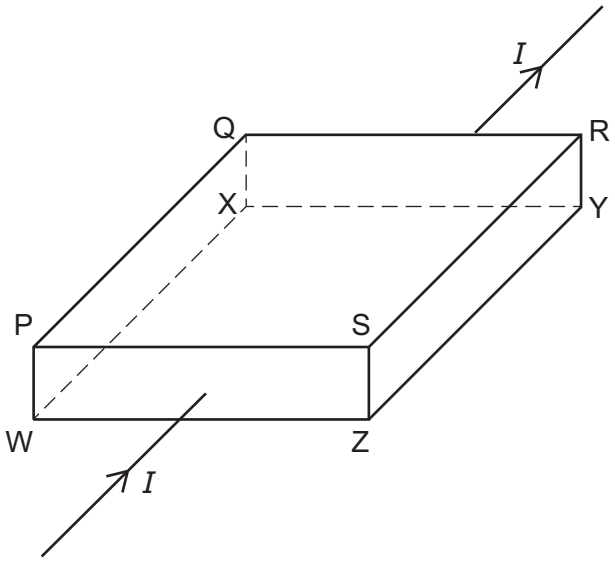

Fig. 6.1 (not to scale)

Current I passes through the slice in the direction shown.

The slice is placed in a uniform magnetic field of flux density B, so that two of its faces are perpendicular to the magnetic field.

A steady Hall voltage V_H is developed between face PQXW and face SRYZ.

(a) (i) Use the letters in Fig. 6.1 to identify the faces that are perpendicular to the magnetic field.

..... and ..... [1]

(ii) Explain how the steady Hall voltage V_H is developed between faces PQXW and SRYZ.

.....

.....

.....

.....

..... [3]

© UCLES 2022

(b) The magnitude of V_H is given by the equation

$$V_H = \frac{BI}{ntq}.$$

(i) State the meaning of the symbols n, t and q. You may refer to the letters in Fig. 6.1.

n: .....

t: .....

q: .....
[3]

(ii) Suggest, with reference to the equation, why the slice of the material used in a Hall probe is thin.

.....

.....

..... [2]

[Total: 9]

7 **(a)** A sinusoidal alternating voltage has a root-mean-square (r.m.s.) potential difference (p.d.) of 4.2 V and a frequency of 50 kHz.

(i) The alternating voltage is applied across a resistor of resistance 760 Ω.

By considering the peak voltage, show that the maximum power dissipated by the resistor is 46 mW.

[2]

(ii) On Fig. 7.1, draw a smooth curve to show how the power P dissipated in the resistor varies with time t between $t = 0$ and $t = 40\,\mu s$. Assume that $P = 0$ when $t = 0$.

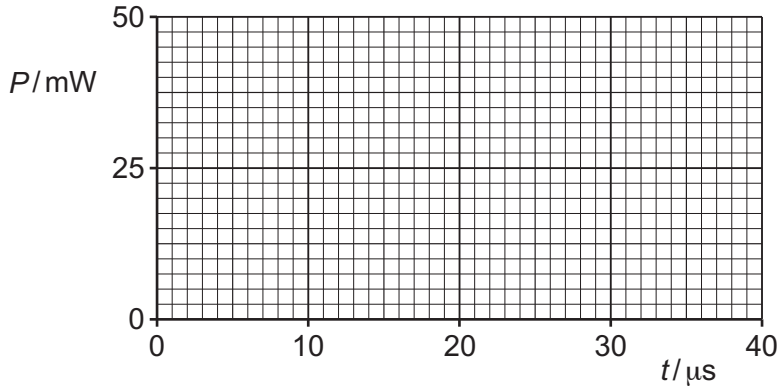

Fig. 7.1

[3]

(iii) Use your line in **(a)(ii)** to explain why the mean power dissipated in the resistor is 23 mW.

.....

.....

..... [1]

(b) The alternating voltage in **(a)** is now applied to a piezoelectric crystal in air.

(i) Explain what happens to the air surrounding the crystal.

.....

.....

.....

..... [3]

(ii) A second piezoelectric crystal is placed in the air near to the first crystal.

Explain the effect of the surrounding air in **(b)(i)** on the second crystal.

..... [1]

[Total: 10]

8 **(a)** State what is meant by the work function energy of a metal.

.....

.....

..... [2]

(b) Ultraviolet radiation of frequency 1.36×10^{15} Hz is incident, in a vacuum, on a metal surface. The power of the radiation incident on the surface is 8.36 mW. Photoelectrons are emitted with a maximum kinetic energy of 3.09×10^{-19} J.

(i) Determine the number of photons incident on the surface per unit time.

number per unit time = ... s^{-1} [2]

(ii) Calculate the work function energy Φ of the metal.

Φ = ... J [2]

(c) The frequency of the radiation incident on the surface in **(b)** is increased while the power remains constant.

State and explain the effect of this change on:

(i) the maximum kinetic energy of the photoelectrons

.....

.....

..... [2]

(ii) the rate of emission of photoelectrons.

.....

.....

..... [2]

[Total: 10]

© UCLES 2022

9 **(a)** State what is meant by the luminosity of a star.

..... [1]

(b) A star in the constellation Canis Major is a distance of 8.14×10^{16} m from the Earth and has a luminosity of 9.86×10^{27} W. The surface temperature of the star is 9830 K.

(i) Calculate the radiant flux intensity of the radiation from the star observed from the Earth. Give a unit with your answer.

radiant flux intensity = ... unit ..... [2]

(ii) Determine the radius of the star.

radius = ... m [2]

(c) Explain how the surface temperature of a distant star may be determined from the wavelength spectrum of the light from the star.

.....

.....

.....

..... [3]

[Total: 8]

10 Carbon-15 ($^{15}_{6}C$) is an isotope of carbon that undergoes radioactive decay to nitrogen-15 ($^{15}_{7}N$), which is a stable isotope of nitrogen.

Radioactive decay is both a random and a spontaneous process.

(a) State what is meant by:

(i) random

.....

..... [1]

(ii) spontaneous.

.....

..... [1]

(b) A small sample of carbon-15 decays. The mass M of carbon-15 in the sample decreases with time t.

Fig. 10.1 shows the variation with t of the value of ln ($M / 10^{-16}$ g).

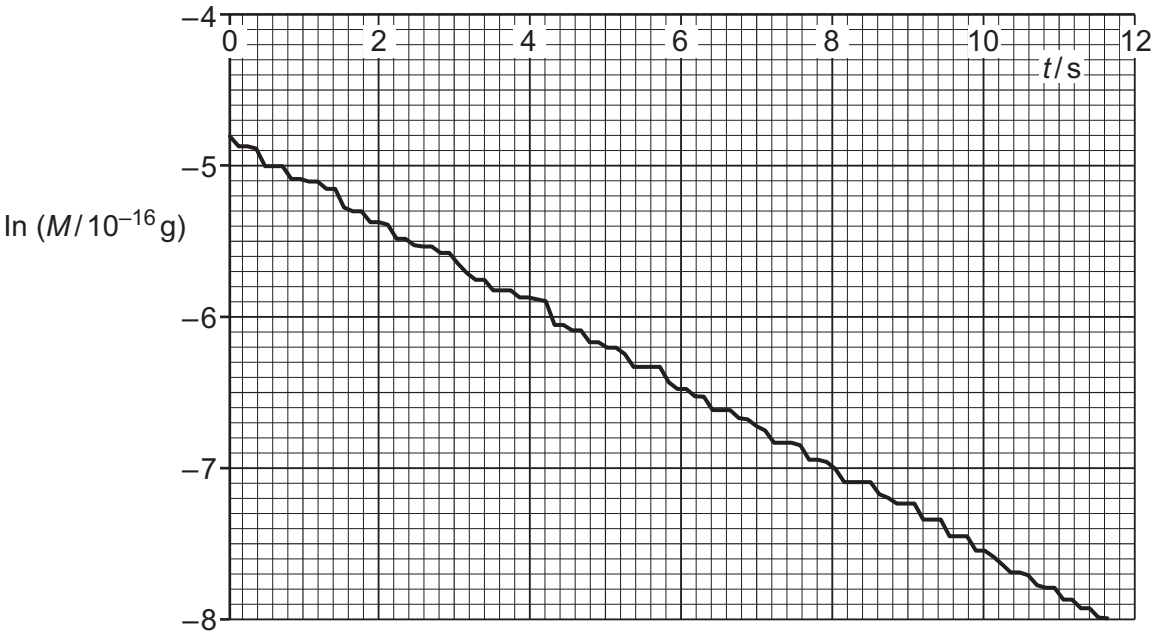

Fig. 10.1

(i) State how Fig. 10.1 demonstrates that radioactive decay is random.

.....

..... [1]

(ii) On Fig. 10.1, draw the straight line of best fit. [1]

© UCLES 2022

(iii) Show that the decay constant λ of carbon-15 is given by the magnitude of the gradient of your line in **(b)(ii)**.

[1]

(iv) Use your line in **(b)(ii)** to determine λ. Give a unit with your answer.

λ = ... unit ..... [2]

(v) Use your answer in **(b)(iv)** to calculate the half-life of carbon-15.

half-life = ... s [1]

(c) The equation for the decay of carbon-15 can be written as

$$^{15}_{6}\text{C} \longrightarrow {}^{15}_{7}\text{N} + {}^{0}_{-1}\beta + {}^{0}_{0}\bar{\nu}.$$

State and explain how the mass of the products of the decay must compare with the mass of the carbon-15 nucleus.

.....

.....

..... [2]

[Total: 10]

© UCLES 2022

BLANK PAGE

Permission to reproduce items where third-party owned material protected by copyright is included has been sought and cleared where possible. Every reasonable effort has been made by the publisher (UCLES) to trace copyright holders, but if any items requiring clearance have unwittingly been included, the publisher will be pleased to make amends at the earliest possible opportunity.

To avoid the issue of disclosure of answer-related information to candidates, all copyright acknowledgements are reproduced online in the Cambridge Assessment International Education Copyright Acknowledgements Booklet. This is produced for each series of examinations and is freely available to download at www.cambridgeinternational.org after the live examination series.

Cambridge Assessment International Education is part of Cambridge Assessment. Cambridge Assessment is the brand name of the University of Cambridge Local Examinations Syndicate (UCLES), which is a department of the University of Cambridge.

© UCLES 2022